Mt. Ashland Ski Area
2013 Restoration Project Plan

Prepared for:
Mr. Kim Clark, General Manager
Mt. Ashland Ski Area
PO Box 220
693 Washington St.,
Ashland OR 97520

Prepared by:
Re-Align Environmental
Bill Granger, Owner
14056 180th Ave SE
Renton, WA
(206) 790-6132
Bill@re-alignenv.com

March 2013

Table of Contents

1.0 Introduction

Twenty watershed restoration projects within four watersheds will be constructed in 2013. These watershed restoration projects include revegetation and construction of stormwater control measures in order to minimize sediment mobilization and transport into streams. These watershed restoration projects are required as part of the ROD. Both structural and non-structural erosion and sediment controls will be constructed in this effort. Table 1 lists the individual watershed restoration projects and their associated construction typicals (see Section 3.0). Figure 1 shows the location of the restoration projects at MASA.

Table 1
Watershed Restoration Project Construction Typical Key

Project Number	Name	Applicable Typicals
WA-1	Windsor Run	C, F
WA-3	Pistol Run	C, F
WA-4	Dan's Run	A, B, F
WA-6	Betwixt Run	A, B, C, F
WA-7	Second Bowl	A, C, F
WA-8	Lower Tempest	A, C, F
WA-10	Bull Gap Creek	F
WA-11	West Fork Bull Gap Creek	C, F
WA-12	Big T Bar Terminal	C, F
WA-13	Pumphouse Creek	D
WN-1	South Ridge	A, C, F
WN-2	Drainfield Service Road	F, G
WN-3	East Ridge	A, F
WN-4	Bull Gap Trail (#1)	E, H, K
WN-5	Bull Gap Trail (#2)	I, L
WN-6	Neil Creek	C, F
WN-7	East Fork Neil Creek	F
WC-1	Cottonwood Meadow	C, F, J
WC-3	Existing Parking Lot	D, F, I, J
WG-1	Road 300	C, J

Figure 1 - Watershed Restoration Project Locations

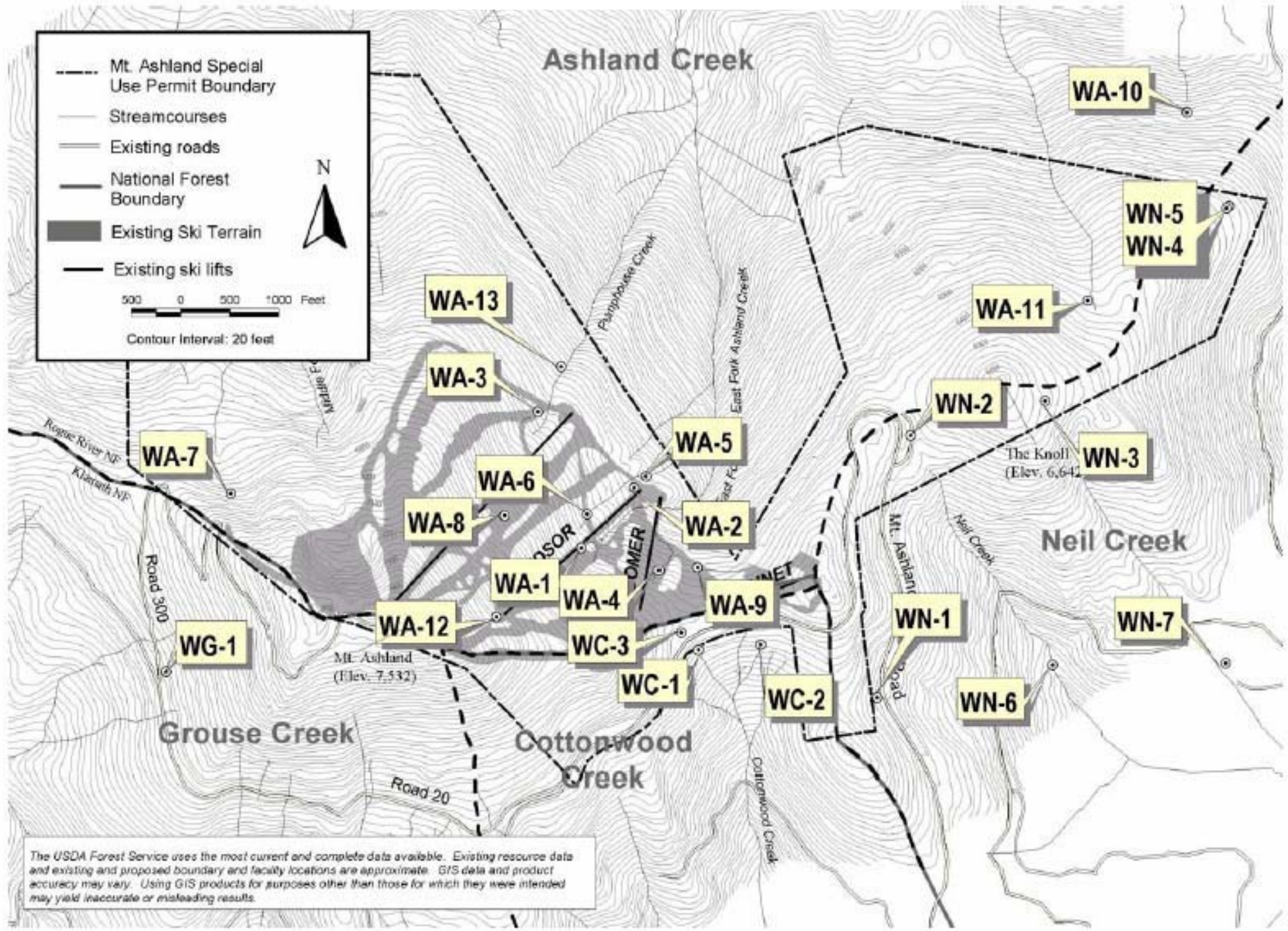

Re-Align Environmental

2.0 Watershed Restoration Project Descriptions

These watershed restoration projects are designed to assist in maintaining or improving the trend toward watershed recovery in the Ashland Creek (**WA**), Neil Creek (**WN**), Cottonwood Creek (**WC**), and Grouse Creek (**WG**) subwatersheds. The following presents a brief description of the intent of each project. Actual construction of each restoration project will be done on an individual basis and adapted to each project site accordingly. As-built construction drawings of each project will be completed following construction to document actual project details.

WA-1 Windsor Run

Sediment is being mobilized about half way up the Windsor Lift and Run and transported down slope to an ephemeral stream near the headwaters of the East Fork of the East Fork of Ashland Creek. This project would revegetate the existing ski run and place LWM perpendicular to the slope to retain sediment.

WA-3 Pistol Run

Sediment is being mobilized in the Pistol Run and transported toward an intermittent stream in the Pumphouse Creek drainage near the bottom terminal of the Ariel Chairlift. This project would revegetate bare areas of the ski run and place LWM and/or large rocks in a cross-slope orientation to retain sediment.

WA-4 Dan's Run

The ephemeral stream in Dan's Run is incised due to lack of riparian vegetation and sediment input from the up-gradient upland areas. The uplands would be stabilized by planting vegetation and by placing SWM in a cross-slope orientation to retain sediment. The stream channel would be stabilized by SWM jams every 50 feet and individual SWM every 10 feet.

WA-6 Betwixt Run

The intermittent stream west of the Windsor Lift becomes incised where it is crossed by the Betwixt Run. Sediment that is mobilized on the run is also being transported to the stream. All bare soil areas near this stream would be revegetated. The stream would be stabilized with one SWM jam at the north side of the ski run. LWM and SWM would be placed in the stream every 10 feet in an alternating fashion 50 feet up and down stream of Betwixt.

WA-7 Second Bowl

Rilling and gully erosion is present on the steep slopes of the "2nd Bowl' in areas where natural forest cover is not very dense. The gully erosion is natural, but large amounts of sediment are being transported to an intermittent stream. This project would spread native grass seeds and mulch on all bare mineral soil areas proximate to the erosion areas and gullies. LWM and SWM would be placed in the gullies approximately every 15 feet in an alternating fashion (dependent on slope gradients) to retain sediment and reduce the chance of continued channel incision.

WA-8 Lower Tempest

Several rills have formed in the Lower Tempest Run and near the Ariel Chairlift. These uplands would be stabilized by planting grass and by placing LWM perpendicular to the slope to retain sediment. SWM and/or rock would be placed in the rills every 15 to 25 feet depending on slope gradients.

WA-10 Bull Gap Creek

To aid in overall watershed improvement, a previously harvested clear cut area (circa mid-60s) in the upper end of Bull Gap Creek, a tributary to Ashland Creek, would be restored. While most of the unit is stocked with young conifers, portions of the riparian area within the unit would be planted with native riparian vegetation for establishment of streamside shading.

WA-11 West Fork Bull Gap Creek

Rilling and gully erosion is present on the slopes of a meadow near the junction of proposed Runs 1A and 3 at an elevation of approximately 6,250 feet. The gully erosion is natural, but large amounts of sediment are being transported to an intermittent stream. This project would spread native grass seeds and mulch on all bare mineral soil areas proximate to the erosion areas and gullies. LWM would be placed in the gully approximately every 15 feet to retain sediment and reduce the chance of continued channel incision.

WA-12 Big T Bar Terminal

This site was the location of the “Big T-Bar” top terminal. Installed in 1963, the terminal was crushed by snow creep in 1974 and was replaced by the Windsor Chairlift in 1978, slightly down slope from the T-Bar location. This excavated site has a lack of vegetation and could benefit from vegetation planting including trees, as it is now not a designated run. This project would place LWM perpendicular to the slope to reduce sediment movement. In addition, native grass seed or plugs along with conifers would be planted and mulched.

WA-13 Pumphouse Creek

Sediment transport occurs in Pumphouse Creek, a tributary to the East Fork of Ashland Creek. A sediment trap would be constructed to retain sediment runoff from ski runs and the maintenance road before it enters this intermittent stream. Sediment collected would be measured at least once annually by the Forest Service and then transported off-site by MAA employees.

WN-1 South Ridge

Soil rilling and sediment transport occurs in the steep areas directly upslope of the Access Road below the proposed snowplay area. This project would seed and mulch all bare soil areas

proximate to the erosion areas and gullies. LWM and SWM would be placed in the gullies every 10 feet in an alternating fashion to retain sediment and reduce the chance of continued channel incision.

WN-2 Drainfield Service Road

Sediment transport and deposition is occurring along a 100-foot stretch of Road 2000195, which provides access to the wastewater treatment plant and drainfield cells. This project would stabilize the disturbed areas near the road with grass seed and mulch, install drain dips on the road every 50 feet, and spread gravel on the entire length of the road.

WN-3 East Ridge

Soil rilling and gully formation occurs in the open meadow in proposed Run 1 east of the Knoll at approximately 6,500 feet in elevation. This project would spread native grass seed and mulch all bare soil areas proximate to the erosion areas and gullies. SWM would be placed in the gullies every 10 feet in an alternating fashion to retain sediment and reduce the chance of continued channel incision.

WN-4 Bull Gap Trail (#1)

Soil rilling and sediment transport are occurring at the upper hairpin corner of the Bull Gap Trail. The old roadbed at this location would be graded to divert water toward the outside edge of the road and a ditch would be constructed with rock check dams approximately every 20 feet. A rock apron 6 feet by 15 feet would be constructed at the outlet of the ditch.

WN-5 Bull Gap Trail (#2)

In conjunction with Project WN-4, this project would install water bars in the old roadbed every 50 feet for 200 feet along the roadway in both directions from the hairpin corner of the Bull gap Trail. Fill slopes of the road would be armored with 2 to 4 inch rock below the outlet of each water bar.

WN-6 Neil Creek

A previously harvested unit (circa early 80s) lies within the headwaters of Neil Creek and below Forest Service Road 2080. Within the riparian area, all overstory trees were removed and the riparian area would benefit from planting of native vegetations to increase shade. This project would also add instream LWM for diversity and complexity of fish habitat.

WN-7 East Fork Neil Creek

Another previously harvested unit (circa early 80s) lies within the headwaters of the East Fork of Neil Creek, below Forest Service Road 2080, and north of project WN-6. Within this riparian

area, all overstory trees were also removed and the riparian area would benefit from planting of native vegetation to increase shade.

WC-1 Cottonwood Meadow

Several large gullies formed on the south side of the main parking lot above the headwaters of Cottonwood Creek after the ski area was constructed in 1963. Previous restoration and erosion control efforts have improved the watershed condition but further efforts are needed. The head cutting of the gullies is due to lack of vegetative cover and over-steepened fillslopes. This project would seed and mulch all bare soil areas proximate to the gullies. LWM and/or large rock would be placed in the gullies every 10 feet in an alternating fashion. An erosion control mat or wood chips would be placed on the fill-slope of the Access Road in this area.

WC-3 Existing Parking Lot

The cut and fill slopes of the existing parking lot are contributing to increased sediment yield to streams and wetlands in Cottonwood Meadow. A combination of erosion control BMPs would be used to minimize sediment sources and to remove sediment from stormwater runoff to the greatest extent practicable before it enters the streams and wetlands.

WG-1 Road 300

Several gullies have formed in the area just above Road 300 near its junction with Road 20. These gullies are transporting sediment to several headwater springs located below Road 20 and have eliminated a substantial amount of habitat for plant species. The sediment transport has also contributed to degradation of the Pacific Crest National Scenic Trail. This project would place LWM and native rock in the gullies every 10 feet in an alternating fashion on several sites. An erosion control mat or wood chips would be placed on the fill-slope of Road 300 where large areas of bare soil are exposed or where soil rilling is observed.

3.0 Watershed Restoration Project Typicals

Table 2 contains the list of construction typicals which are associated with each restoration project as depicted in Table 1-1. Note that some restoration projects make use of multiple construction typicals to construction the restoration project. Please note there is no drawing for Typical E – Seeding/Revegetation as there are no structures associated with this typical.

Table 2
Construction Typical Key

Construction Typical	Title
Typical A	Small Woody Material Single Piece Placement
Typical B	Large Woody Material Single Piece Placement
Typical C	Sediment Basin/Trap
Typical D	Rock Check Dams
Typical E	Seeding/Revegetation
Typical F	Drain Dips
Typical G	Drainage Ditch
Typical H	Water Bars
Typical I	Erosion Control Mat/Armoring
Typical J	Rock Apron/ Outlet Protection

Typical A Small Woody Material Single Piece Placement

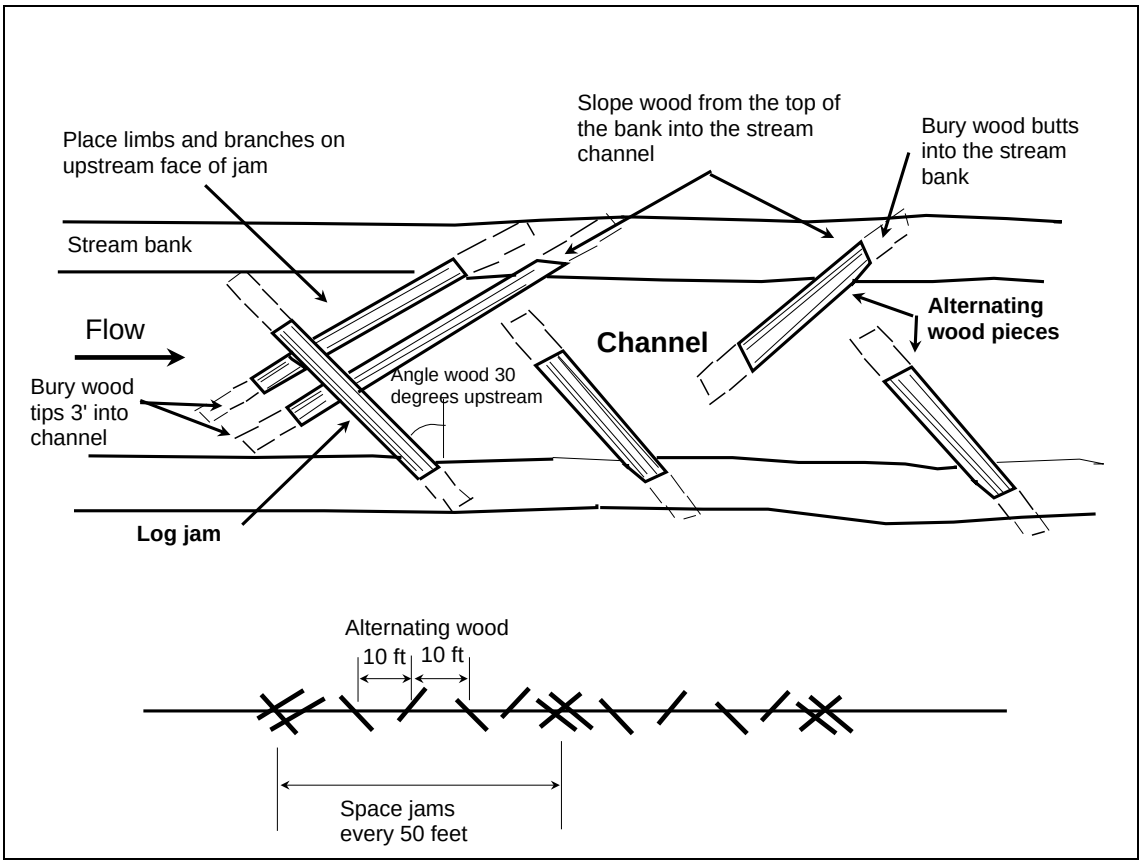

Source: Chris Park, USFS Hydrologist

Typical B Large Woody Material Single Piece Placement

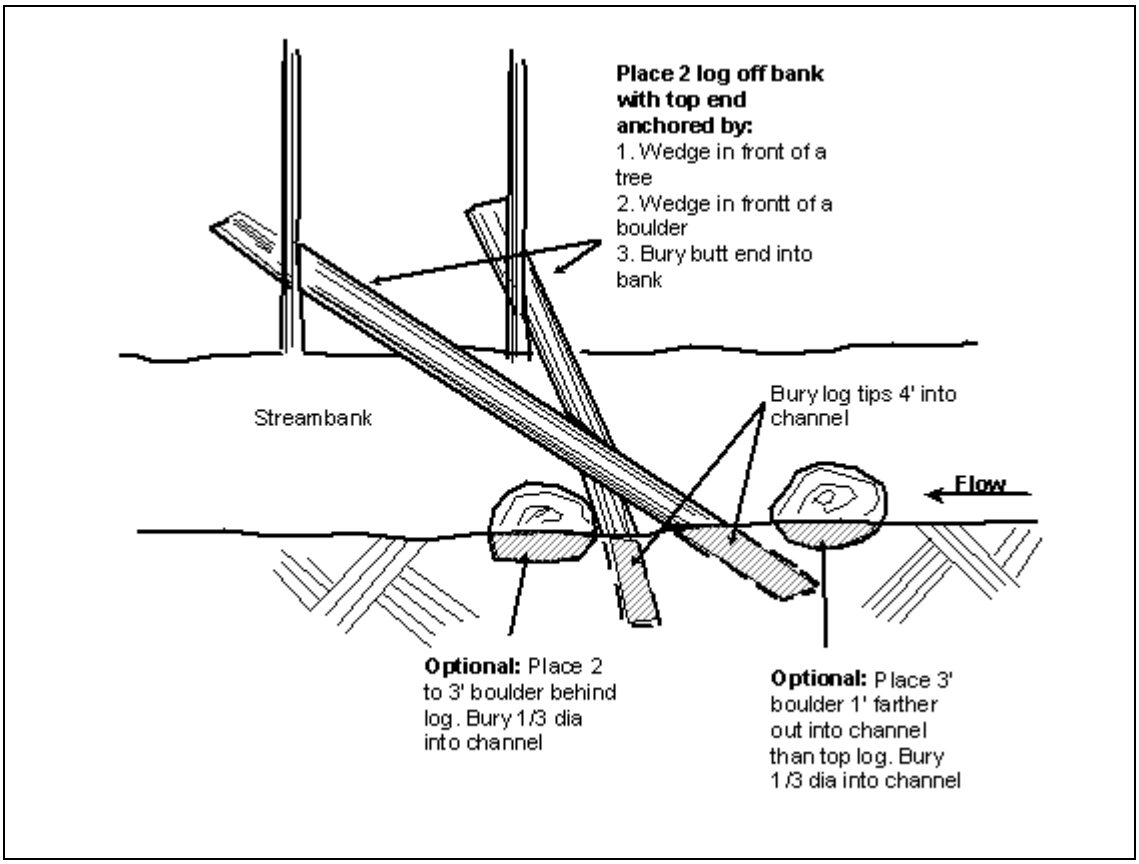

Source: Chris Park, USFS Hydrologist

Typical C Sediment Basin/Trap

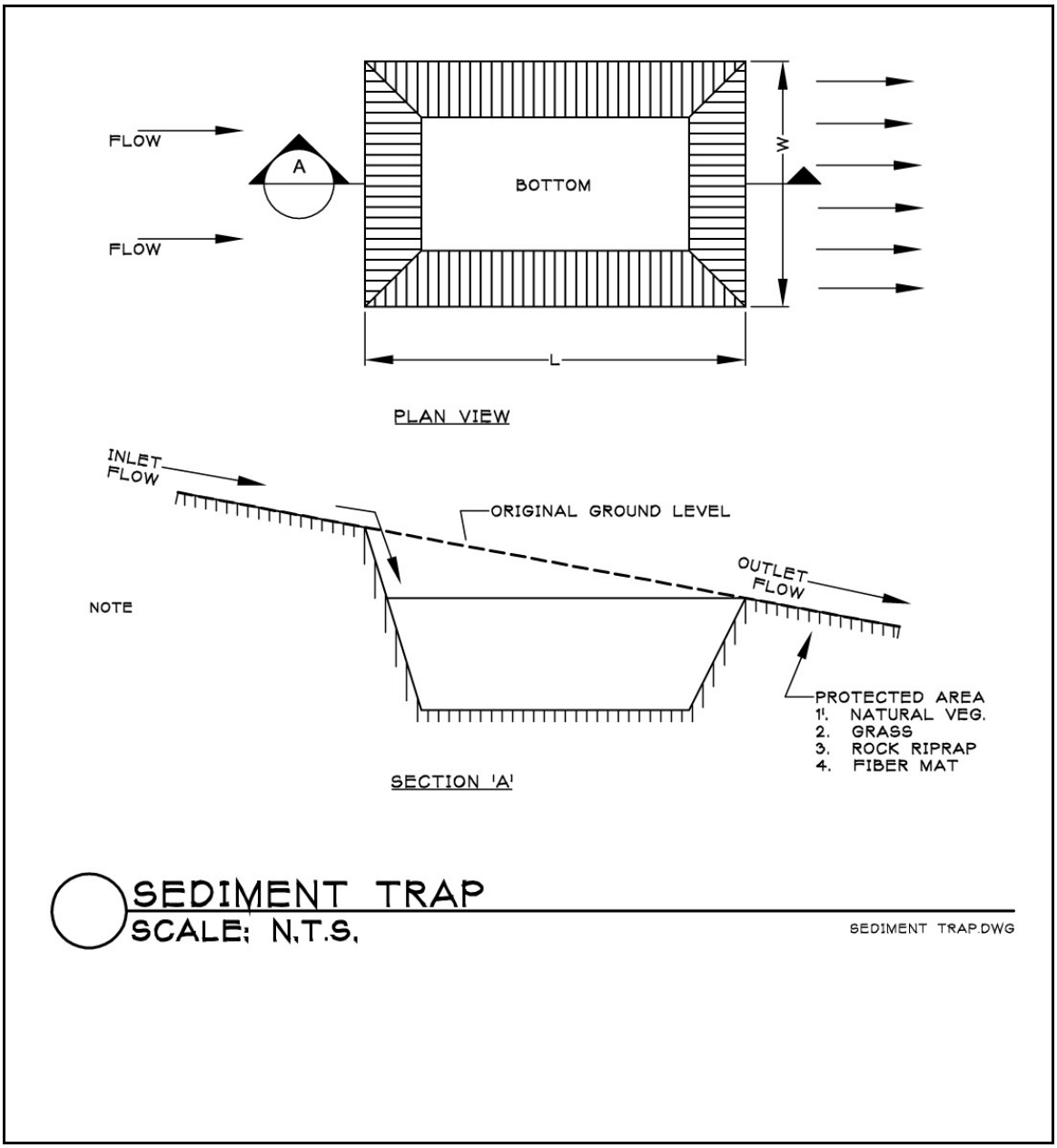

Typical D Rock Check Dams

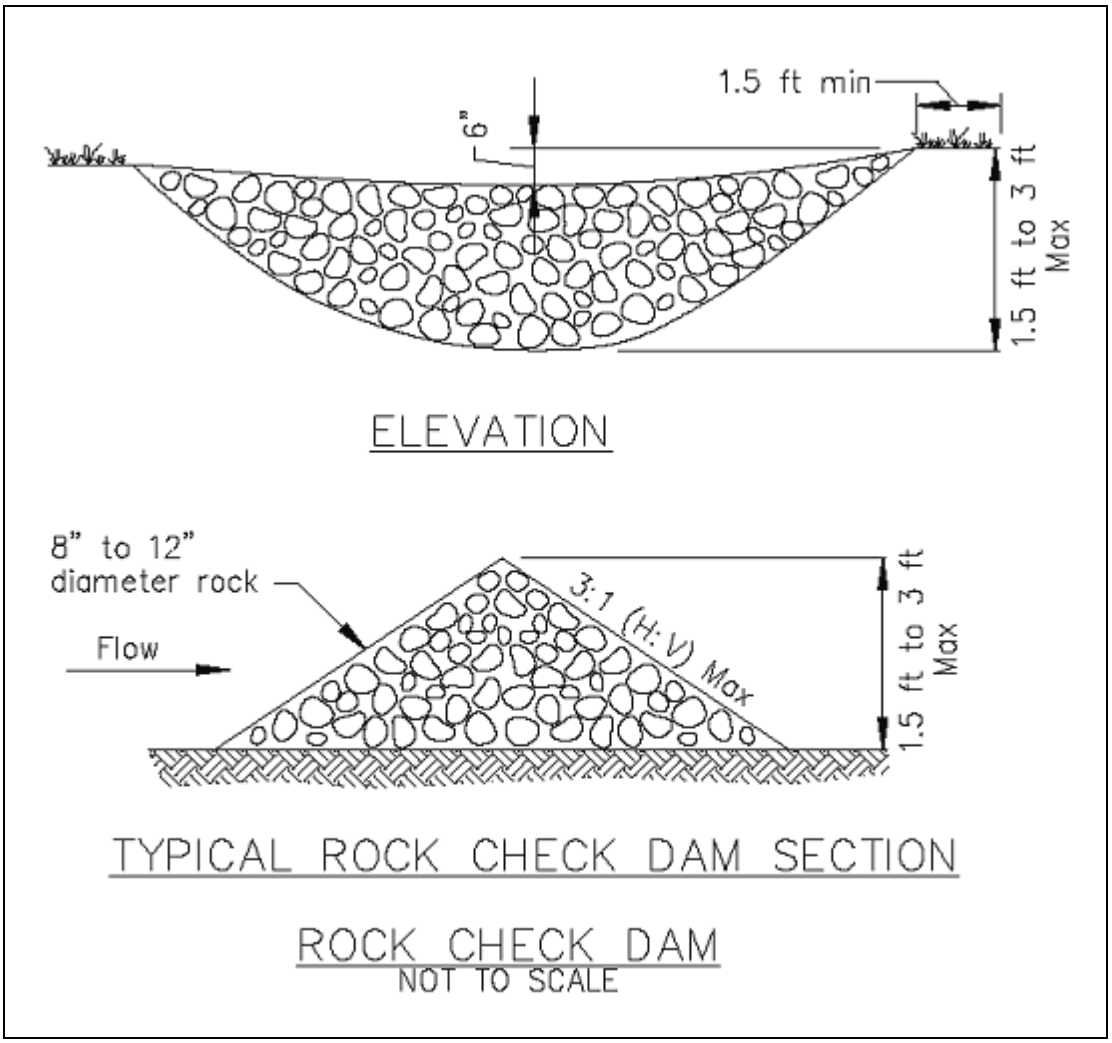

Typical F Drain Dips

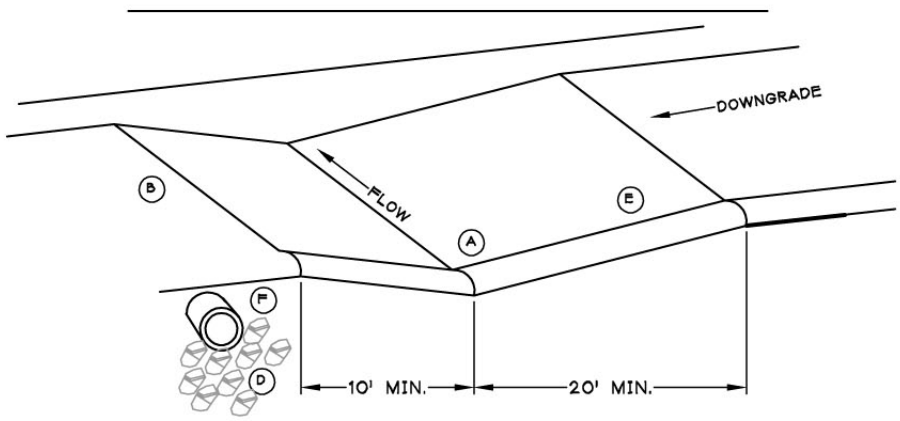

DESIGN OF INSLOPE DIPS:
A TO C THIS SLOPE IS 4-6 INCHES, TO ASSURE LATERAL FLOW.
B. NO MATERIAL ACCUMULATED AT THIS POINT, MAY REQUIRE SURFACING TO PREVENT CUTTING.
C. WIDEN FOR DITCH AND PIPE INLET.
D. PROVIDE ROCK (RIP RAP) TO PREVENT EROSION.
E. BERM TO PREVENT OVERFLOW.
F. CULVERT TO CARRY WATER BENEATH ROAD.

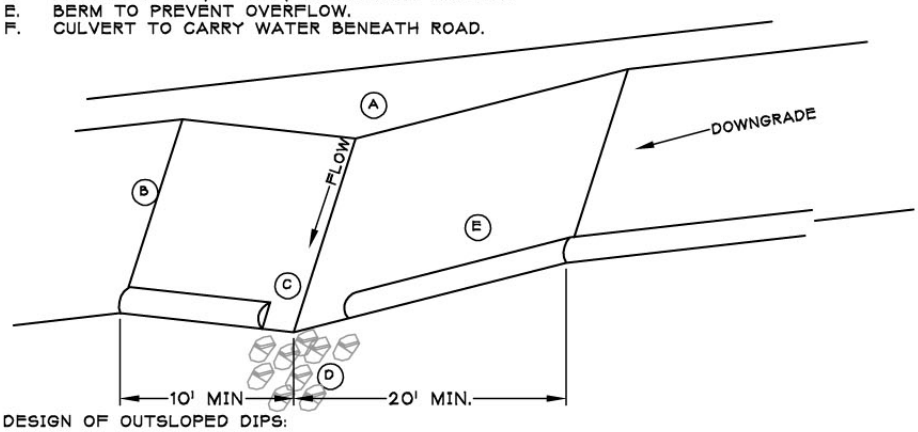

DESIGN OF OUTSLOPED DIPS:
A TO C THIS SLOPE IS 4-6 INCHES, TO ASSURE LATERAL FLOW.
B. NO MATERIAL ACCUMULATED AT THIS POINT, MAY REQUIRE SURFACING TO PREVENT CUTTING.
D. PROVIDE ROCK (RIP RAP) TO PREVENT EROSION.
E. BERM TO PREVENT OVERFLOW.

DRAINAGE DIPS
SCALE: N.T.S.

DRAINAGE DIPS

Re-Align Environmental

Typical G Drainage Ditch

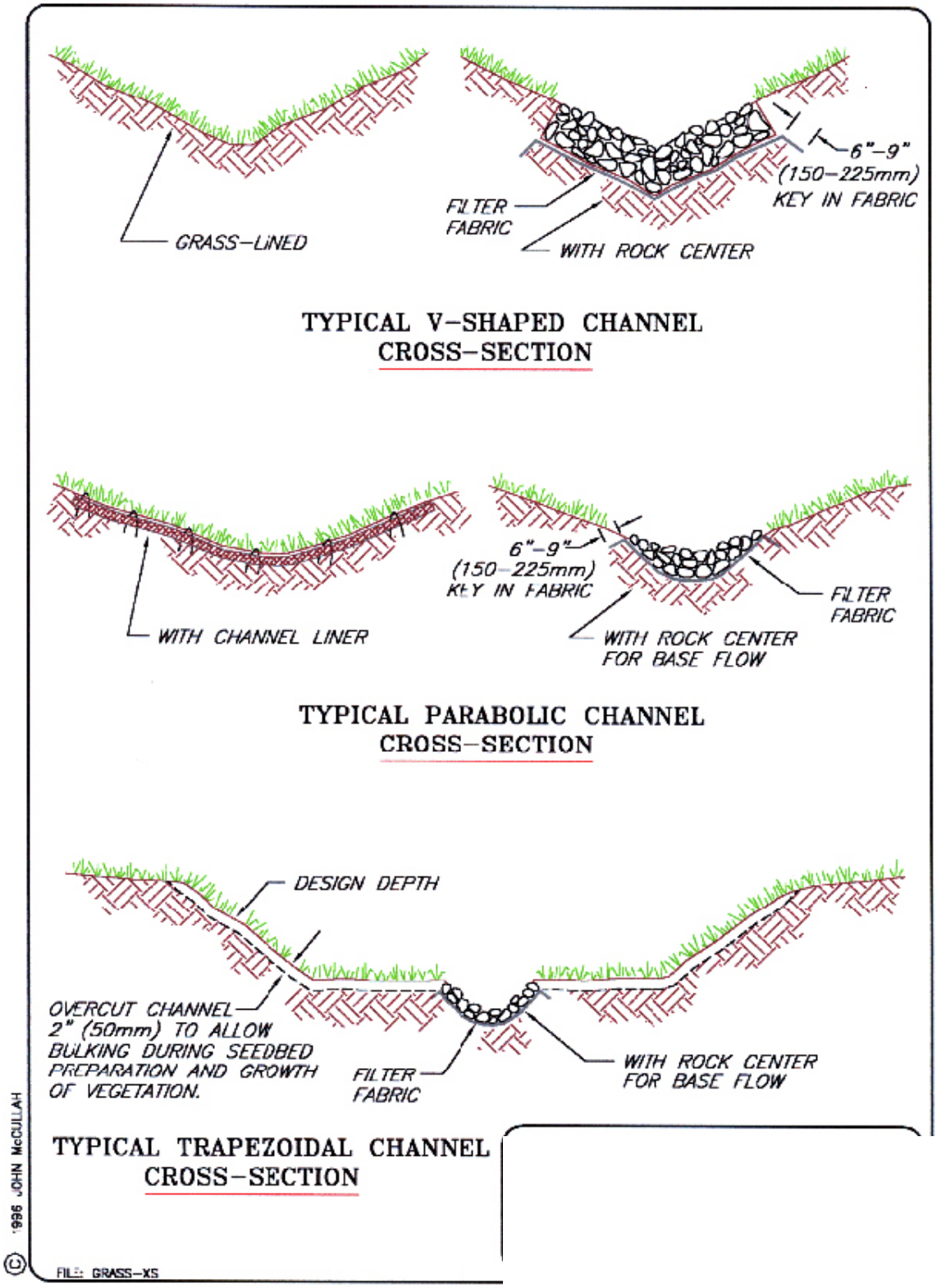

Typical H Waterbars

Note:

1.) Locate water bars carefully. Divert water into natural drainages or undisturbed ground.

2.) Water bars on ski slopes will be guided by the following specifications:

Grade (%)	**<10%**	**10-20%**	**20-40%**	**>40%**
Spacing (ft.)	**200'-500'**	**100'-200'**	**60'-100'**	**50'**

3.) Sediment traps should be constructed at the end of all water bars.

4.) Revegetate immediately after soil disturbance.

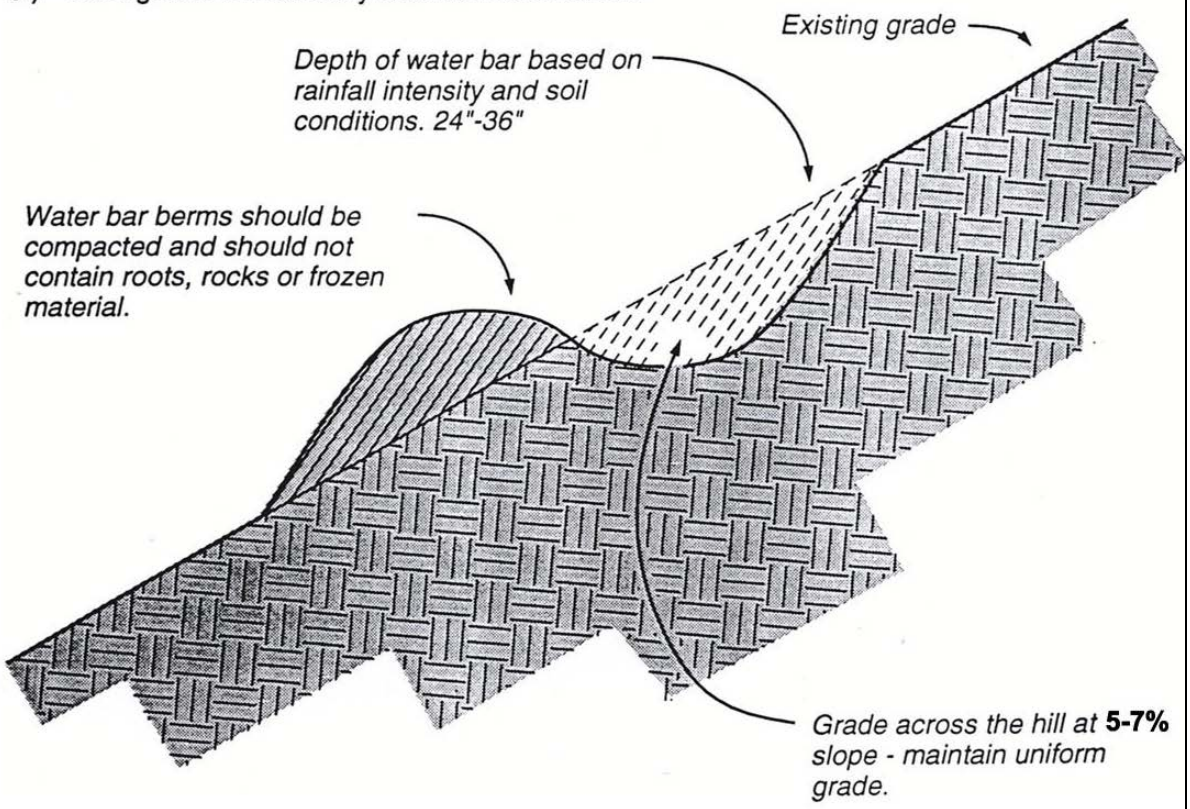

Typical I Erosion Control Mat/Armoring

FIGURE D.4.B WATERWAY INSTALLATION

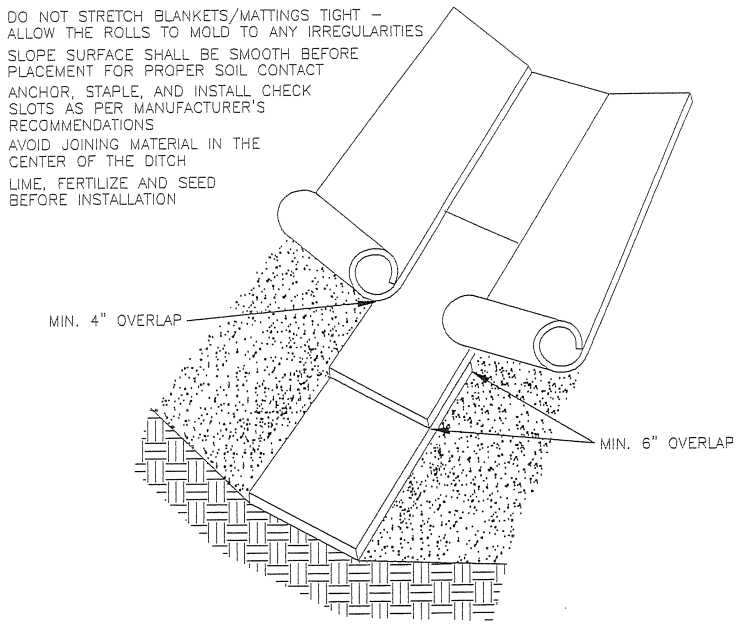

FIGURE D.4.C SLOPE INSTALLATION

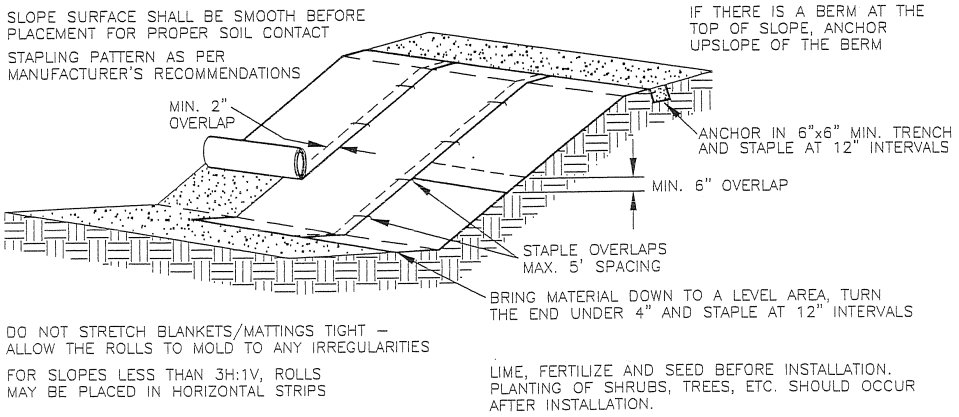

Re-Align Environmental

Typical J Rock Apron/ Outlet Protection